HOIST®
FITNESS SYSTEMS

S304

CHEST PRESS

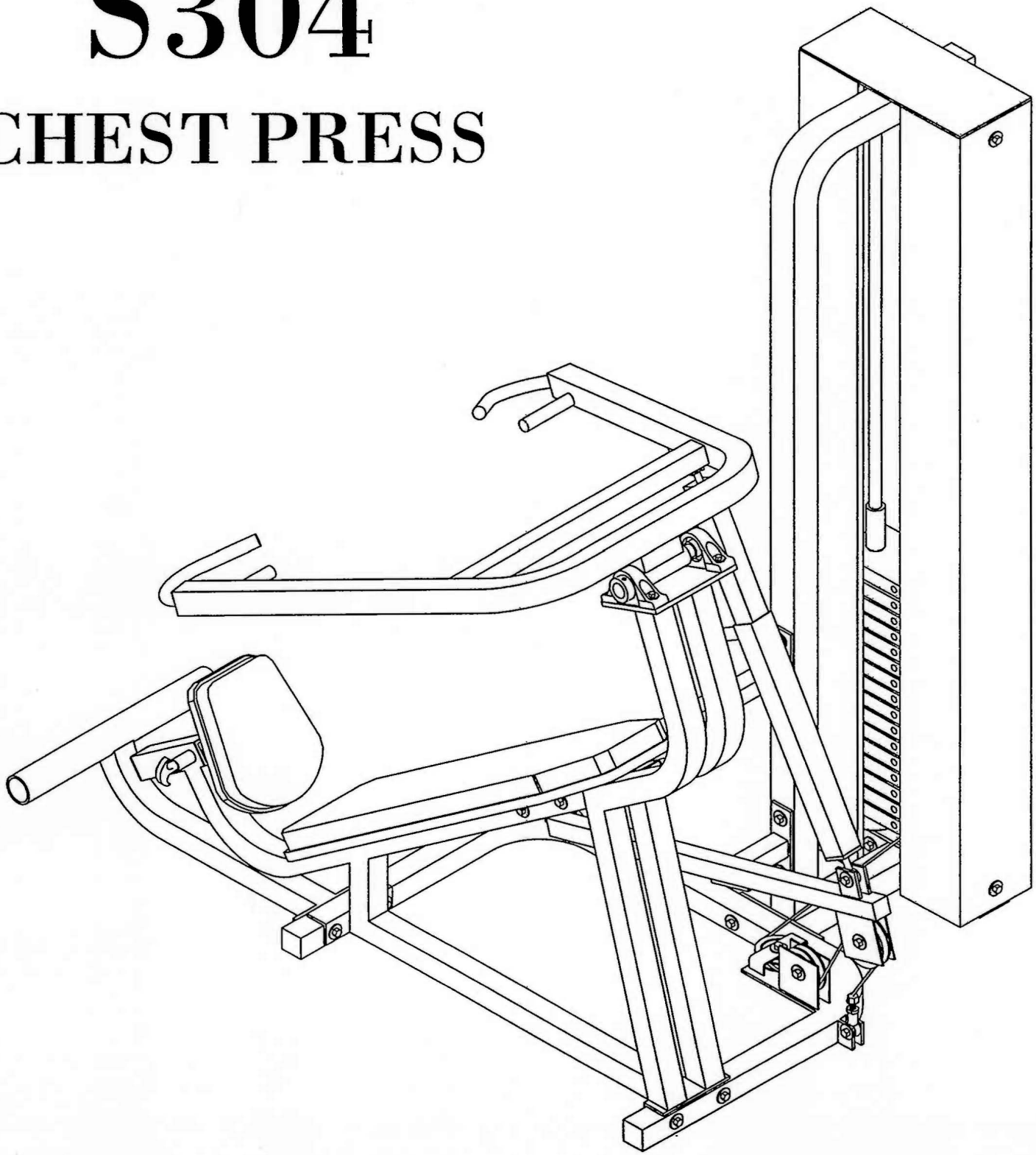

CUSTOMER CATALOG

AUGUST '94

PARTS LIST

Key No.	Qty.	Part Number	Description
1	1	61-S304-11	FOOTREST ASSEMBLY
2	1	61-S304-01	BENCH ASSEMBLY
3	1	61-S304-12	BASE TUBE
4	1	61-S304-02	WEIGHT UPRIGHT
5	1	61-S304-03	CROSSMEMBER
6	1	61-S304-13	ARM REST ASSEMBLY
7	2	19-PAD-1	RUBBER STOPS
8	4	14-BRG-RAD1PILP	PILLOW BEARING
9	1	61-S304-09	RESISTANCE LEVER ASSY.
10	1	61-STD-SU911	SEAT PAD
11	2	61-STD-PLAS112	EZ-GLIDE SEAT PAD MOUNT
12	1	61-S304-10	SEAT PAD MOUNT
13	2	61-STD-SM128	1/2" PULL-PIN (SHORT)
14	1	61-STD-SU1035	10" x 40" TAPERED BACK PAD
15	1	61-S304-08	ARM ASSEMBLY
16	2	14-END-M1220	TIE ROD END (MALE)
17	1	61-S304-07	ADJUSTER TUBE (INNER)
18	1	61-S304-06	ADJUSTER TUBE (OUTER)
19	1	14-END-F1220	TIE ROD END (FEMALE)
20	1	61-S304-04	WEIGHT TOP
21	2	14-BSH-GRD1	GUIDE ROD SNAP BUSHINGS
22	2	61-STD-SG107	3/4" x 59 3/4" GUIDE ROD
23	1	61-STD-SW102	8 1/4 LB. TOP WEIGHT PLATE W/ STEM
24	20	61-STD-SW101	12 1/2 LB. WEIGHT PLATE
25	2	19-WSB-12	1/2" RUBBER DONUT
26	1	61-S304-05	WEIGHT BASE
27	2	61-STD-SSH120	59 3/4" SHEILD

HARDWARE

Key No.	Qty.	Part Number	Description
A	2	11-HEX-383	3/8 x 3 HEX BOLT
B	14	11-HEX-38234	3/8 x 2 3/4 HEX BOLT
C	5	11-HEX-382	3/8 x 2 HEX BOLT
D	8	11-HEX-38134	3/8 x 1 3/4 HEX BOLT
E	4	11-HEX-381	3/8 x 1 HEX BOLT
F	60	13-FLT-38	3/8 USS FLAT WASHER
G	29	12-LOK-38	3/8 CENTER LOCK HEX NUT
H	2	11-HEX-516114	5/16 x 1 1/4 HEX BOLT
I	4	13-FLT-516	5/16 USS FLAT WASHER
J	3	11-HEX-12112	1/2 x 1 1/2 HEX BOLT
K	6	13-FLT-12	1/2 USS FLAT WASHER
L	3	12-LOK-12	1/2 CENTER LOCK NUT
M	5	18-PUL-412	4 1/2 PULLEY
N	2	11-HEX-516314	5/16 x 3 1/4 Hex Bolt

S304

CHEST PRESS
CUSTOMER CATALOG

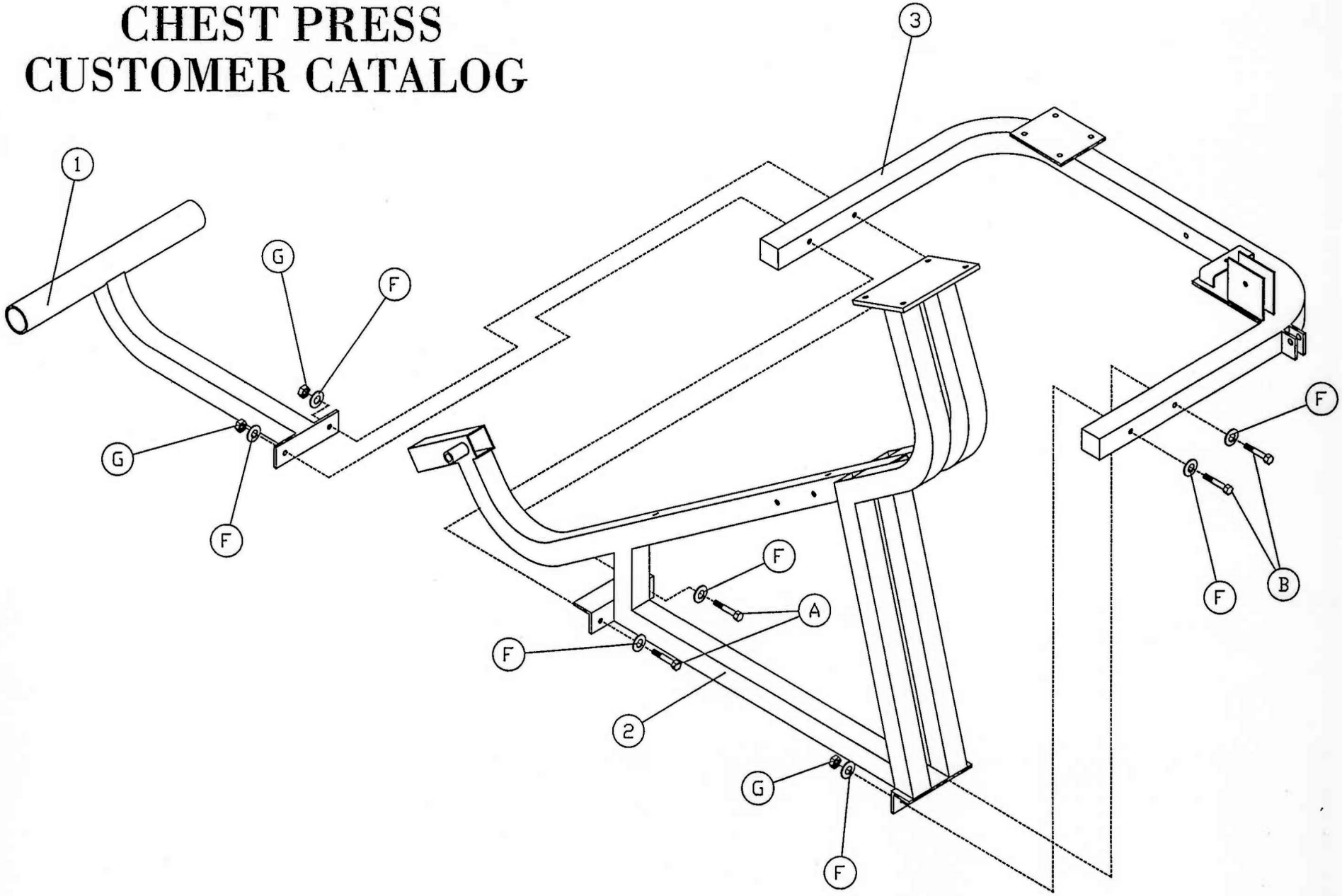

S304
CHEST PRESS
CUSTOMER CATALOG

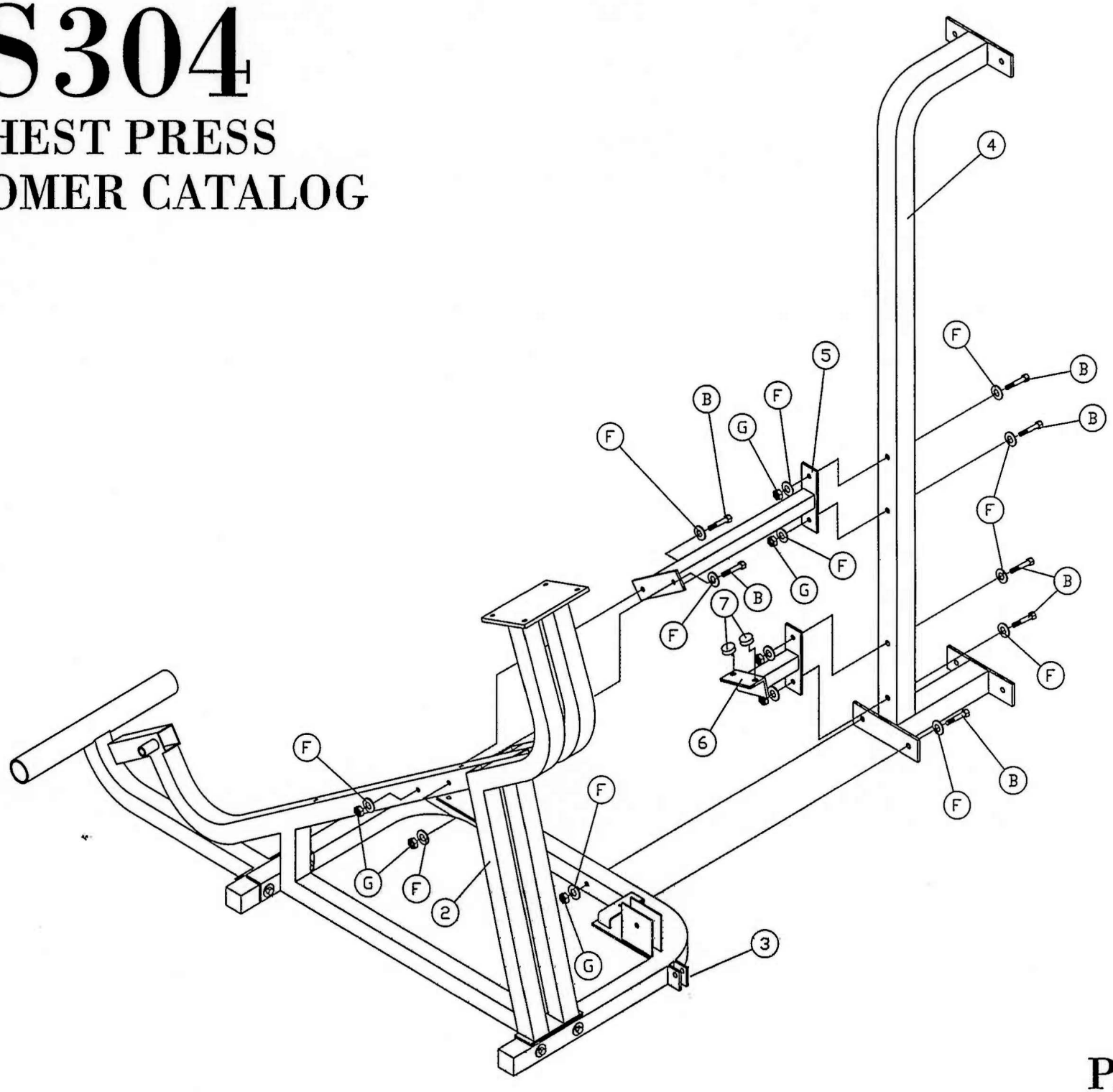

S304

CHEST PRESS
CUSTOMER CATALOG

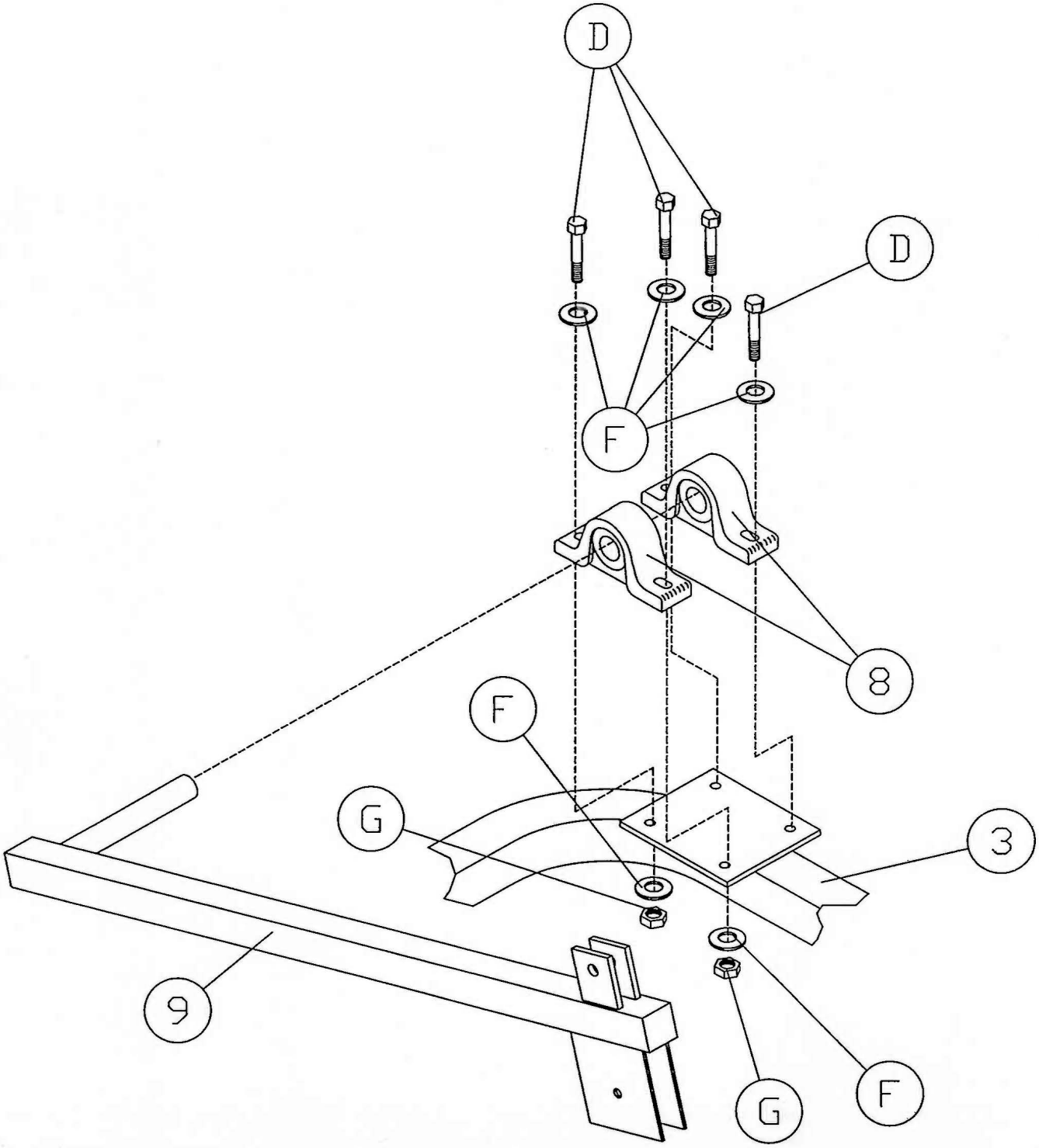

S304

CHEST PRESS
CUSTOMER CATALOG

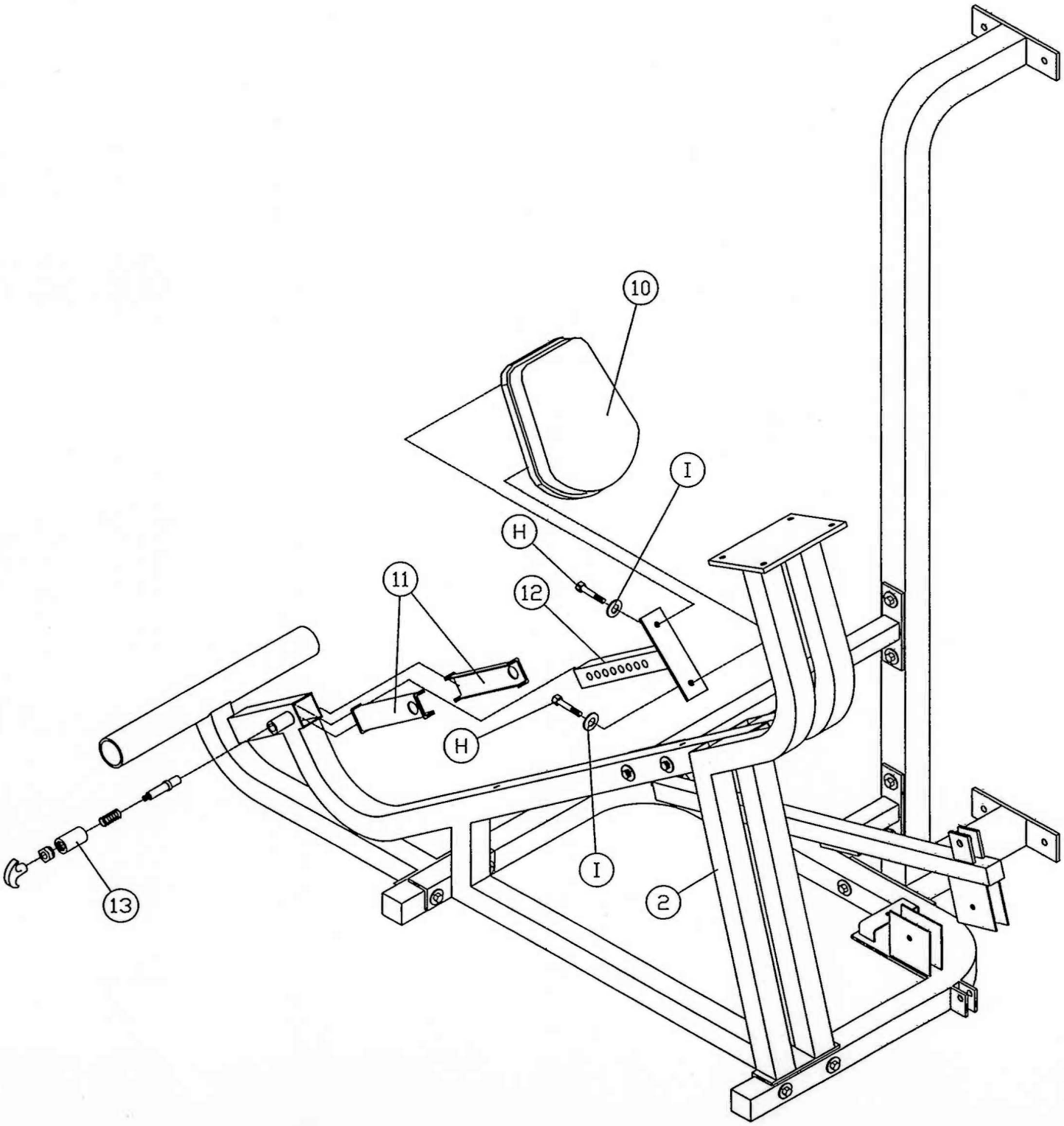

S304

CHEST PRESS
CUSTOMER CATALOG

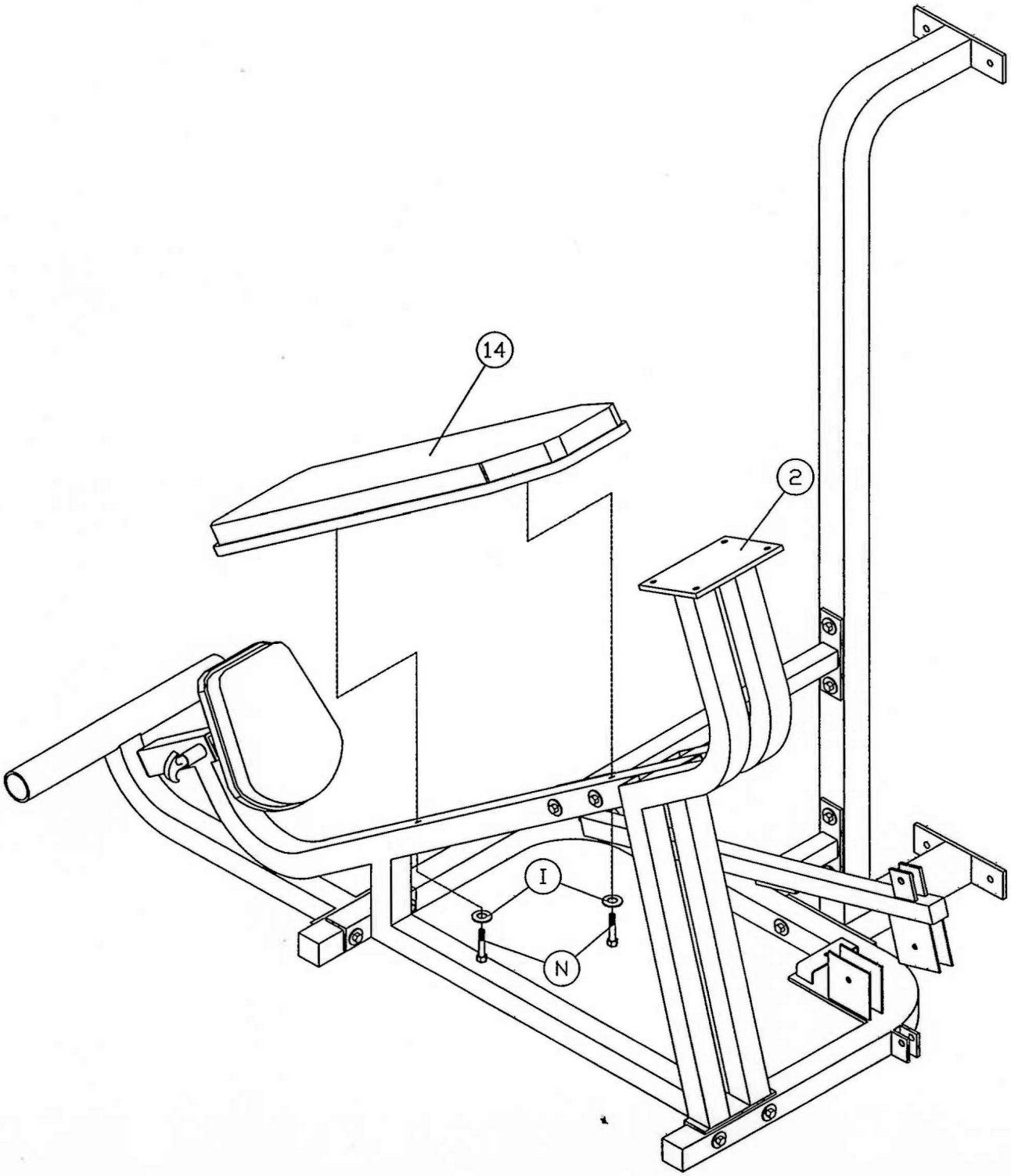

S304

CHEST PRESS
CUSTOMER CATALOG

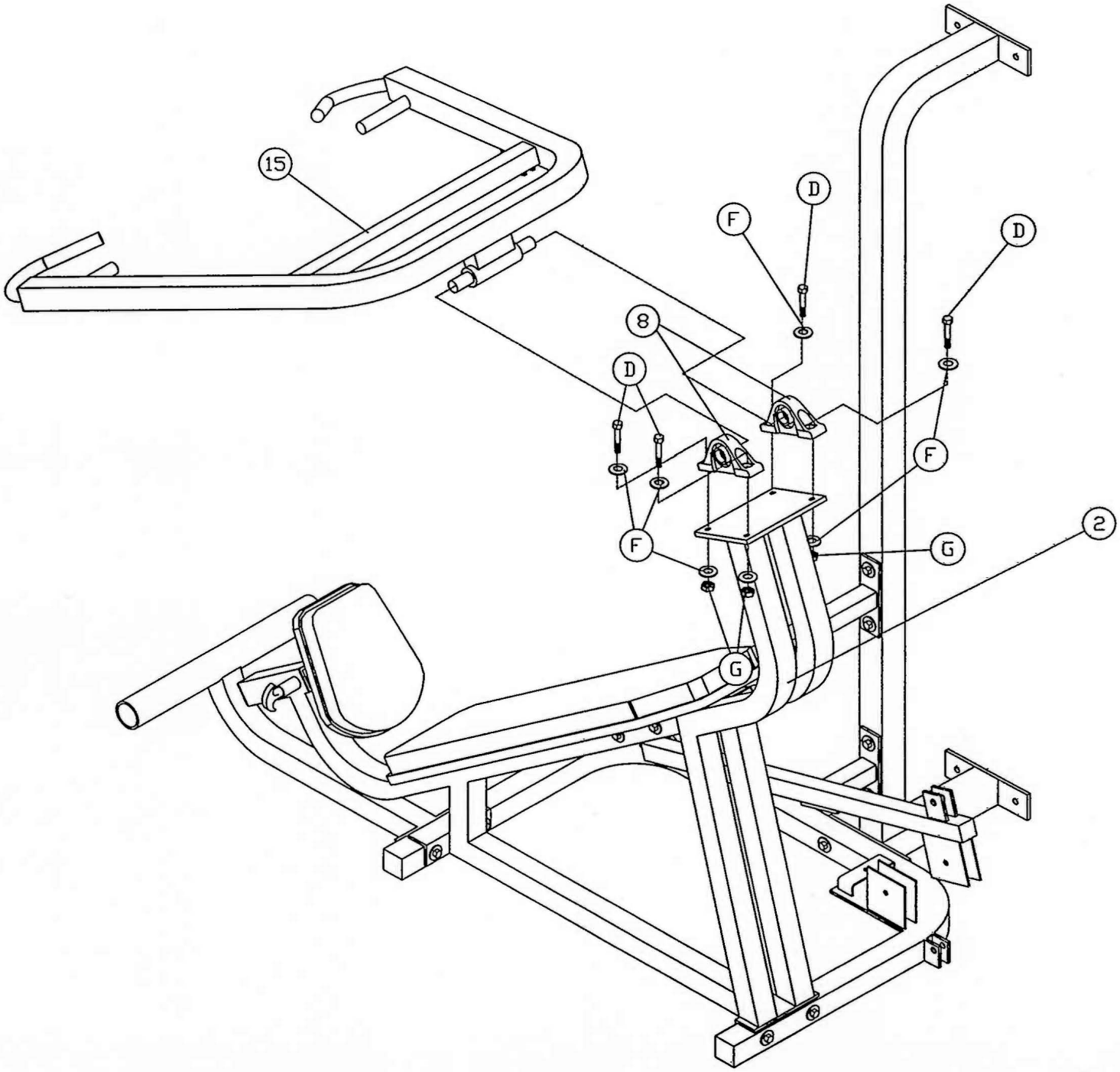

S304

CHEST PRESS
CUSTOMER CATALOG

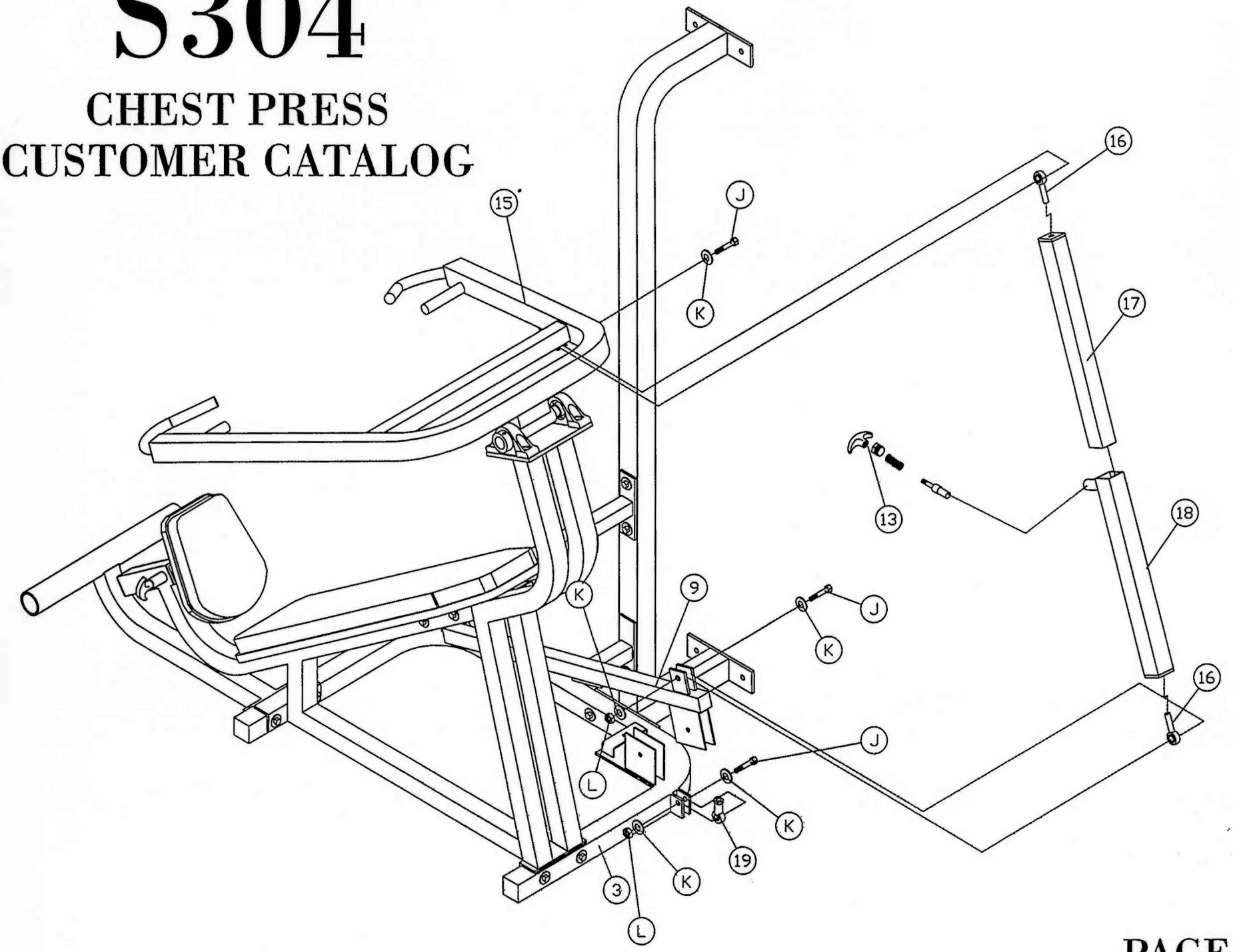

S304

CHEST PRESS
CUSTOMER CATALOG

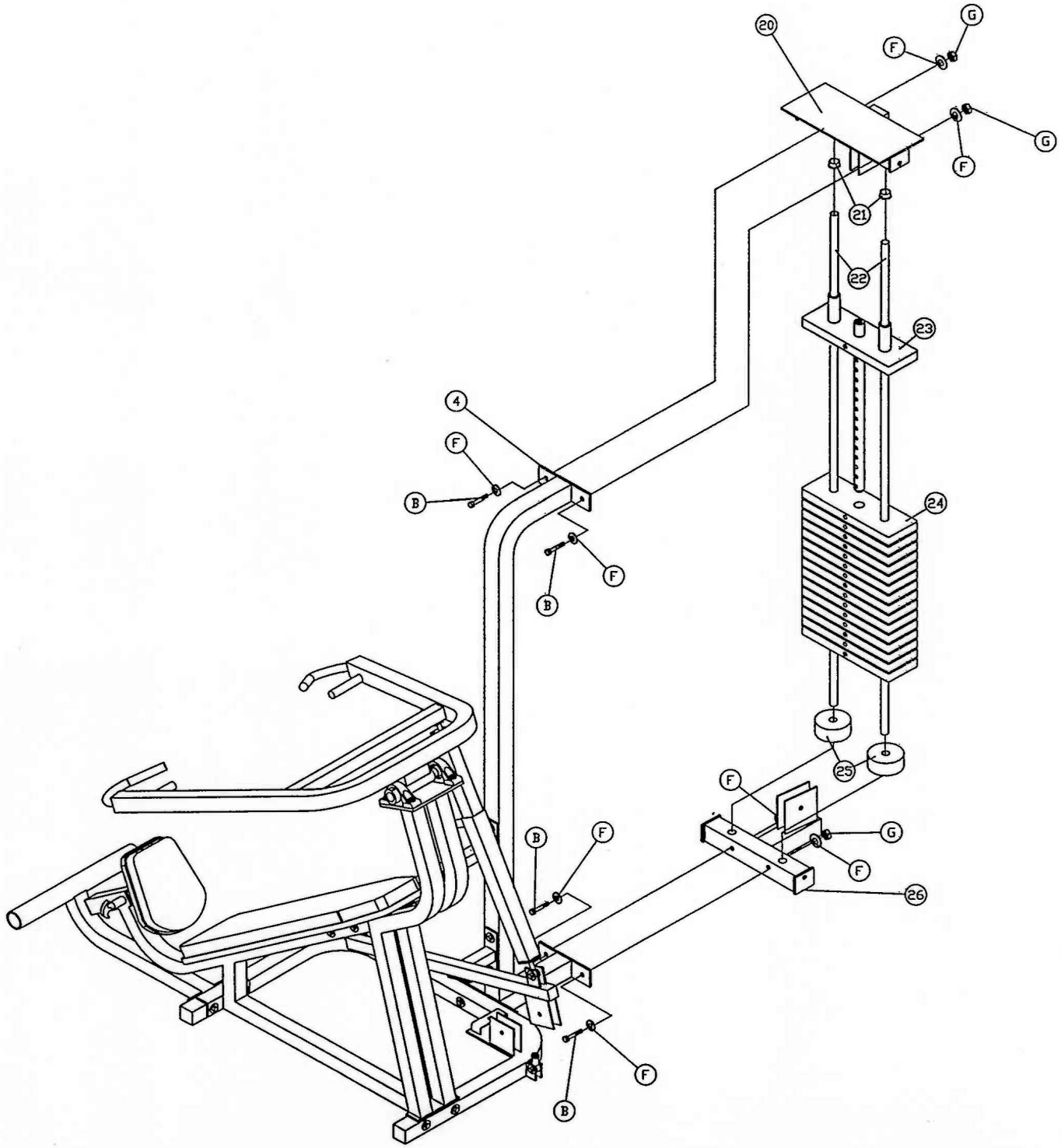

S304

CHEST PRESS
CUSTOMER CATALOG

1

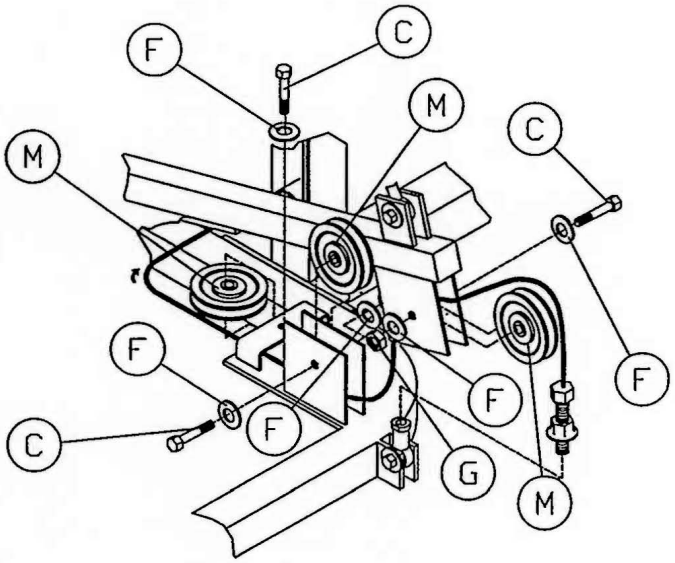

3

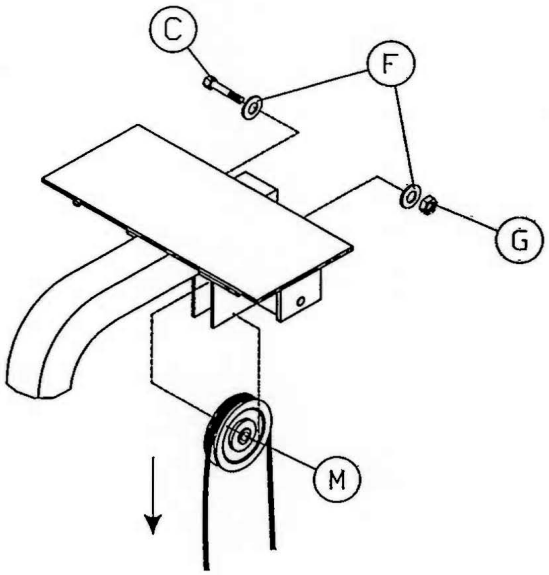

2

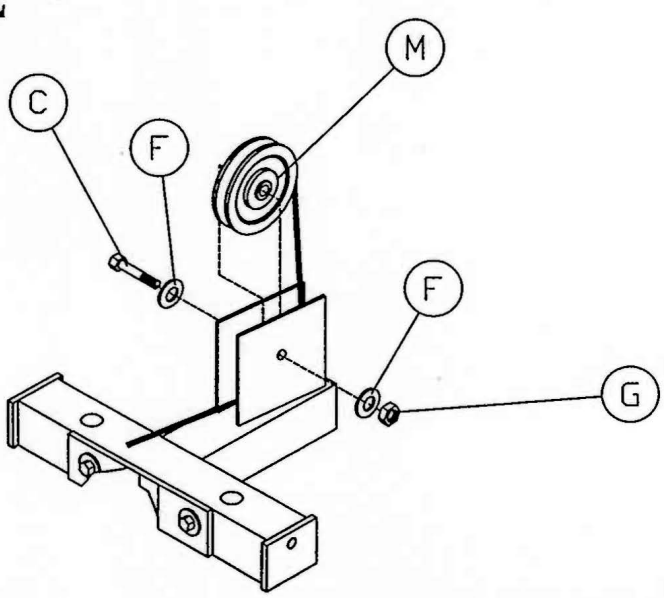

4

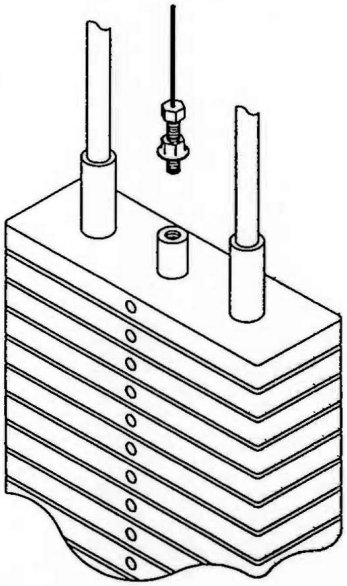

S304

CHEST PRESS
CUSTOMER CATALOG

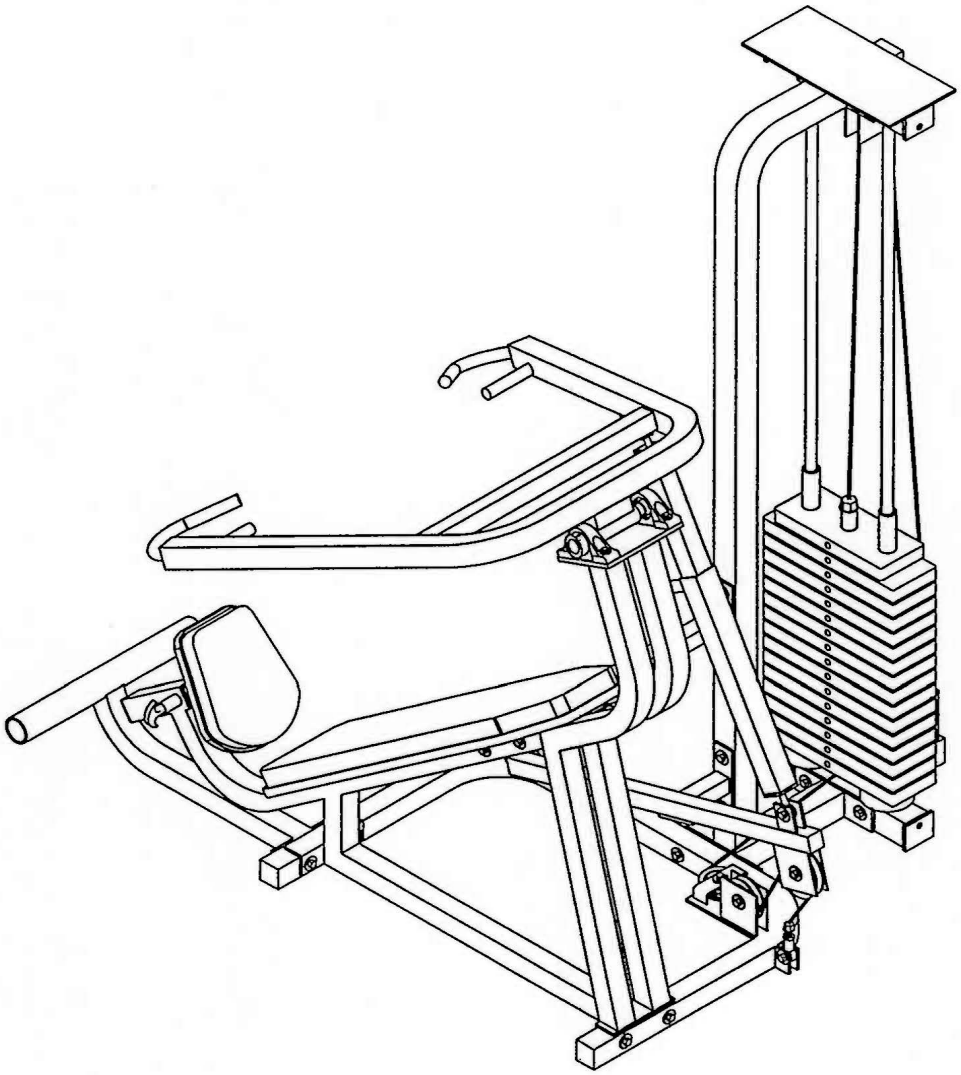

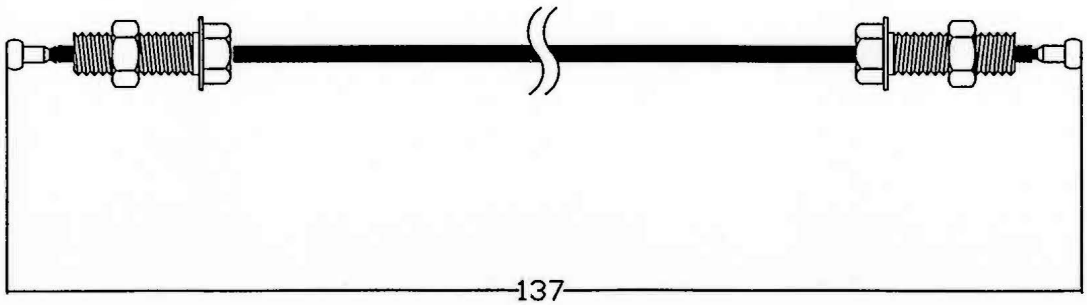

S304
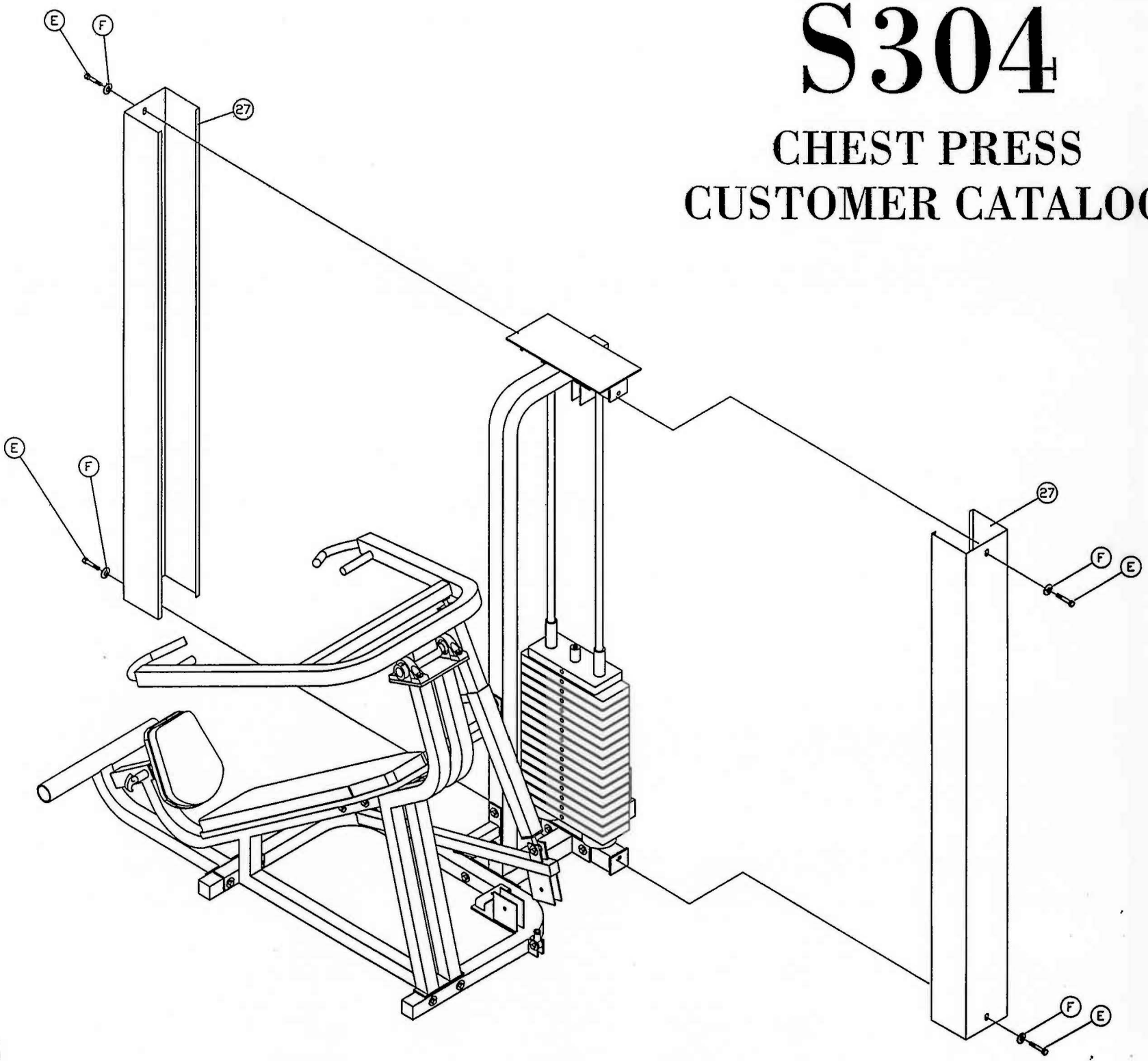
CHEST PRESS
CUSTOMER CATALOG